RCF

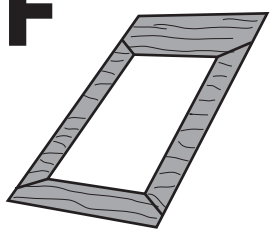

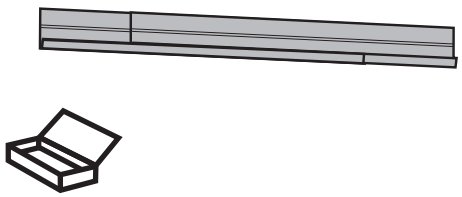

1

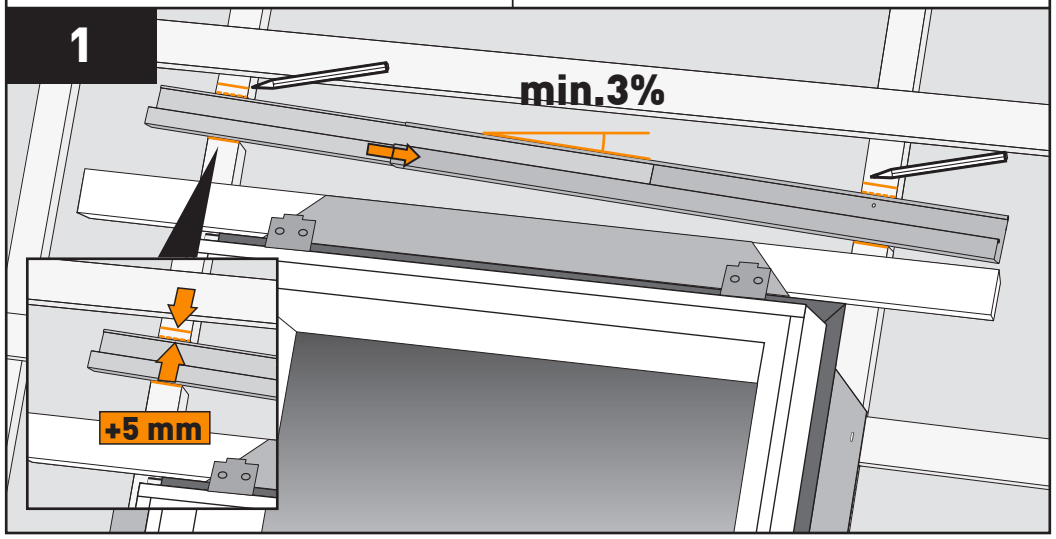

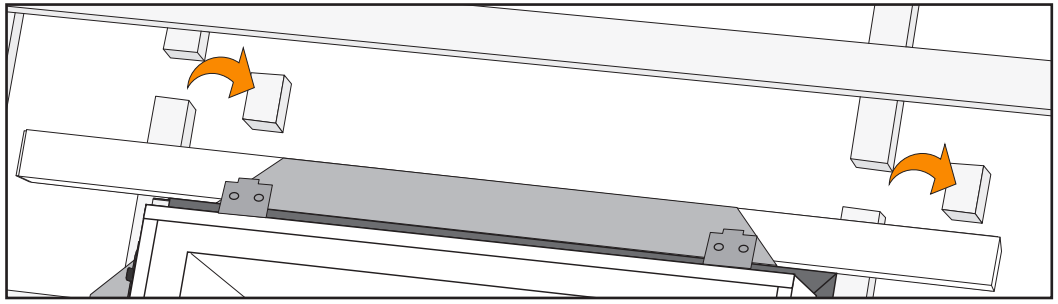

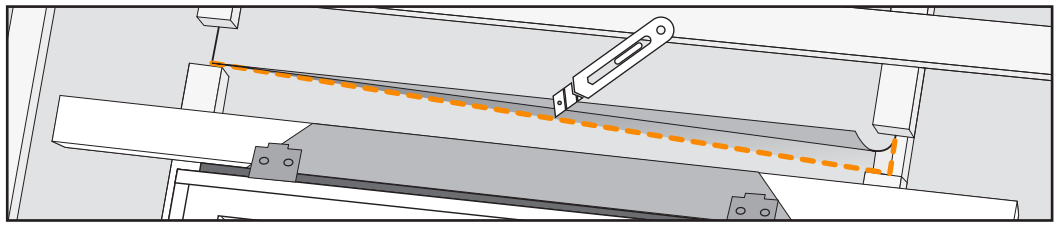

2

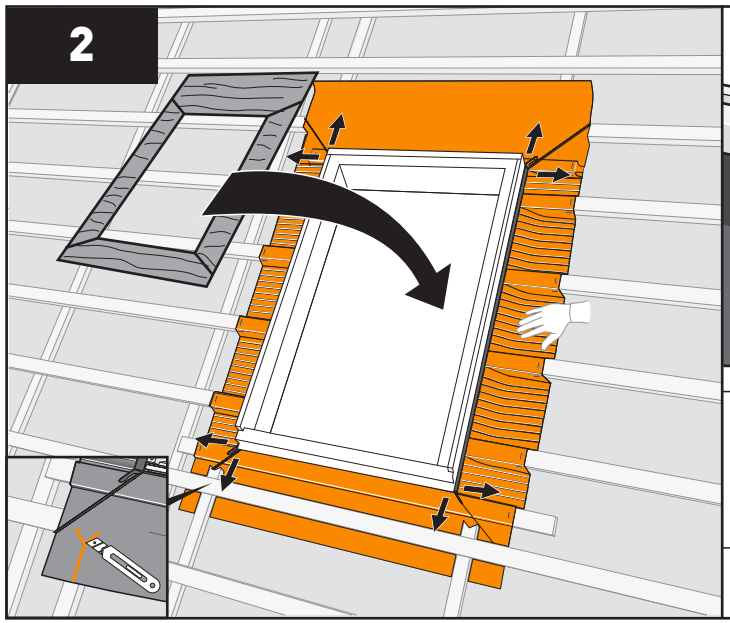

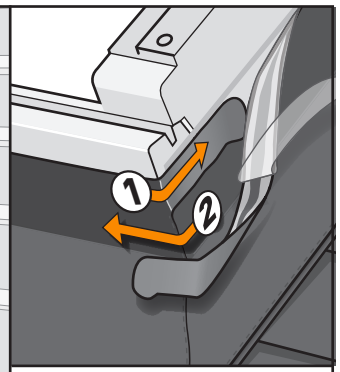

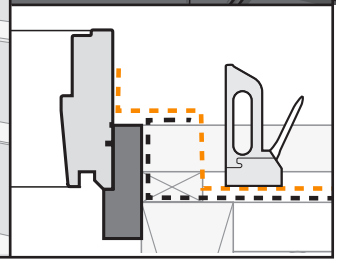
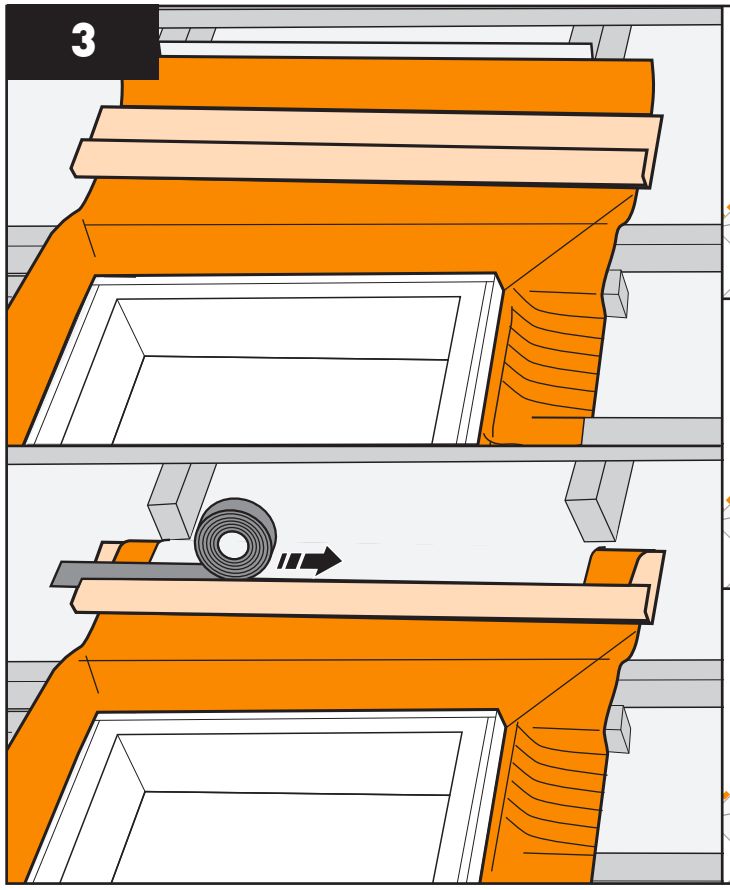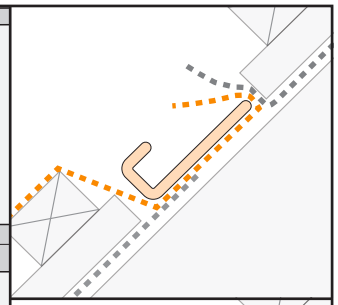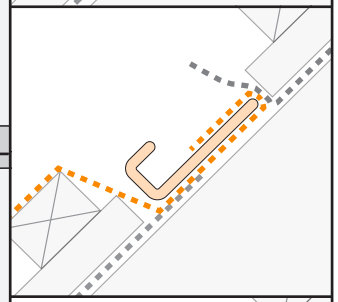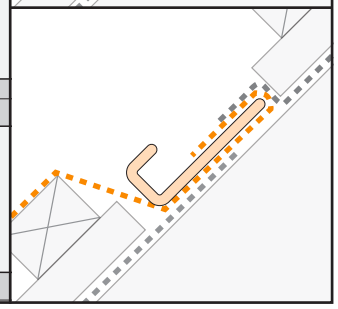
3